K7506RD-14

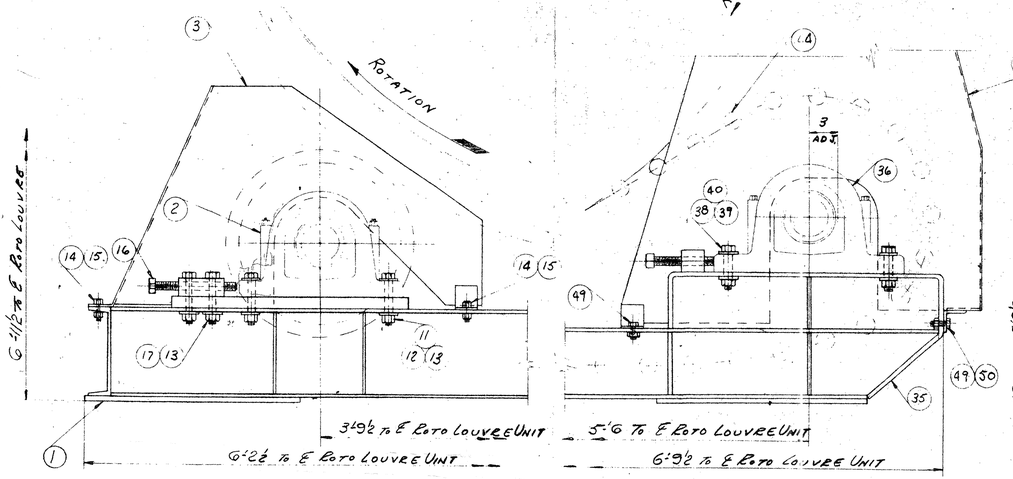

ENLARGED DETAIL "X"

ENLARGED DETAIL "Y"

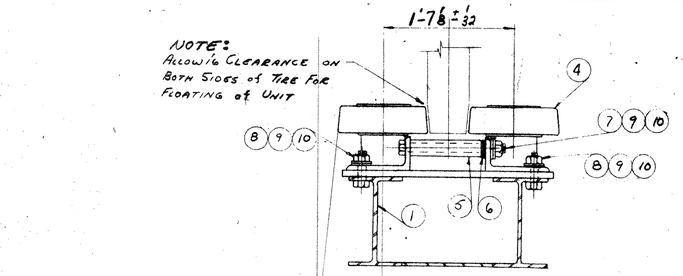

SECTION F-F

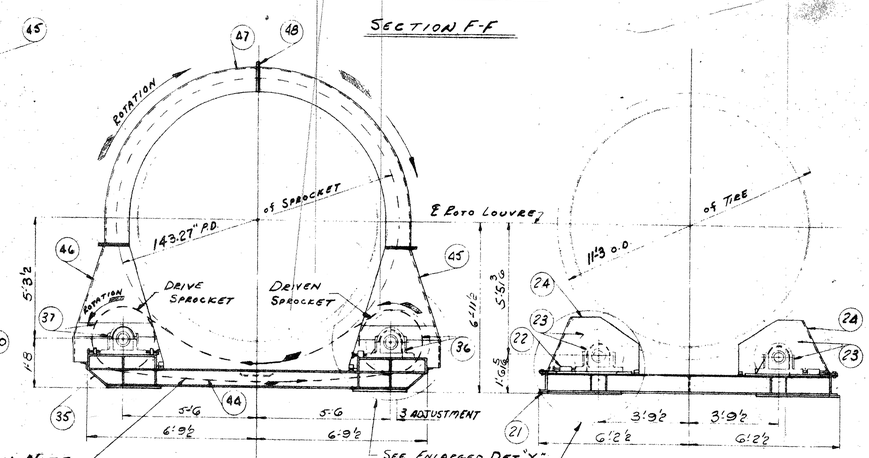

VIEW B-B

VIEW C-C

FIELD ERECTION NOTE
INSTALL WITH OPEN END OF LINE LEADING IN THE DIRECTION OF TRAVEL. ADJUST BOTTOM RUN OF CHAIN TO PROVIDE A SAG OF ABOUT 4"

TANGENTIAL DRIVE ASSEMBLY (C)
SERIES P-LB 79130 FAC (FIXED) ROLLER BEARINGS, PE-LB 79130 FAC (FLOATING) ROLLER BEARINGS, AND PE-LB 79130 FA (FLOATING) ROLLER BEARINGS.

DISCHARGE END ASSEMBLY (B)
SERIES PE-LB 79130 FAC (FLOATING) ROLLER BRG. AND P-LB 79130 FAC (FIXED) ROLLER BEARING

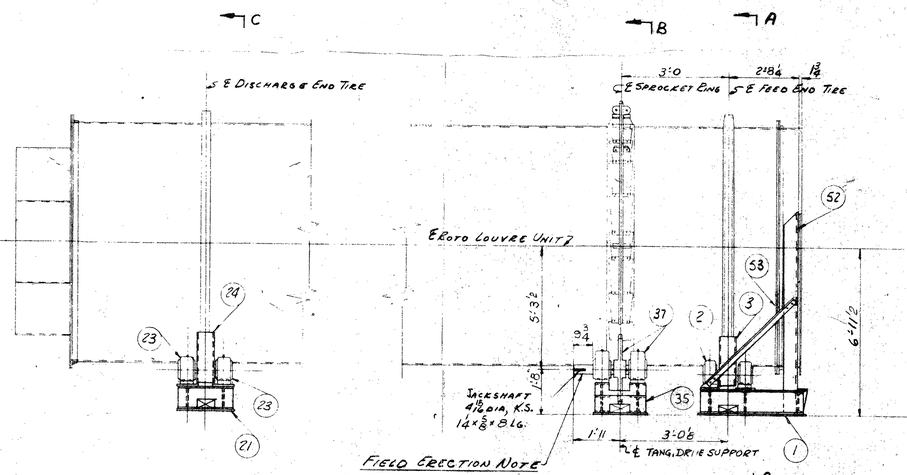

FIELD ERECTION NOTE
ERECT TANGENTIAL DRIVE ASSEMBLY W/ DRIVE SPROCKET JACKSHAFT ON NEAR SIDE

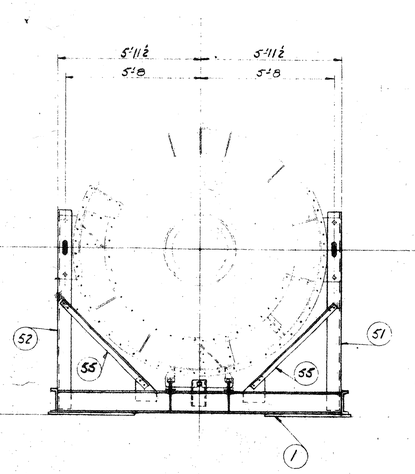

FEED END ASSEMBLY (A)
SERIES PE-LB 79130 FAC (FLOATING) ROLLER BEARING AND P-LB 79130 FAC (FIXED) ROLLER BEARING

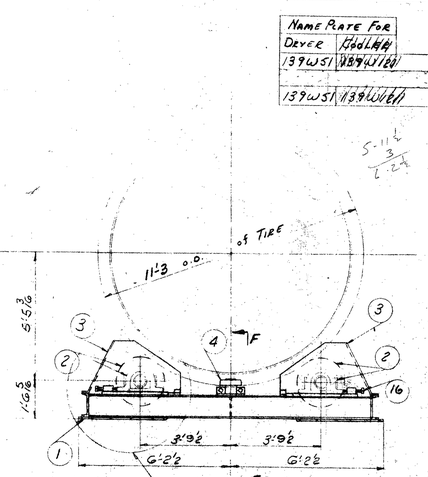

SECTION A-A

NAME PLATE FOR		
DEVER	FEED END	
139WS1	139WS1	
139WS1	139WS1	

UNION CARBIDE NUCLEAR CO.'S EQUIPMENT #403

CERTIFIED FOR CONSTRUCTION
LINK-BELT CO., CHICAGO
BY: 4-4-63

FORM DWG. 1671275

MATERIAL LIST

IDENTIFICATION GROUP	IDENTIFICATION PIECE	QUAN.	SPECIFICATION DWG. OR PART NO.	SPECIFICATION NAME, DESCRIPTION, MATERIAL	REFERENCE	SYMBOL
A		1		FEED END ASSEMBLY		
	1	1	1824221-A	FEED END SUPPORT		
	2	2	1670232-A	TRUNNION ROLLER ASSEMBLY		
	3	2	1670232-B	TRUNNION ROLLER GUARD		
	4	2	851225-A	THRUST ROLLER ASSEMBLY		
	5	2	851228-10	PIPE		
	6	16		7/8 DIA. SQUARE WASHER 2 O.D. x 1/16 LG.		
	7	2	851225-15	BOLT	P.8	
	8	4		BOLT H.H.H.N. 1" DIA x 3/16	P.4	
	9	6		1" DIA CUT WASHER	P.2 6&7	
	10	6		1" DIA LOCK WASHER	P.2 6&7	
	11	16		BOLT H.H.H.N. 5/8" DIA x 6" LG.	P.8	
	12	32		5/8" DIA CUT WASHER	P.11	
	13	16		5/8" DIA LOCK WASHER	P.11	
	14	8		BOLT H.H.H.N. 3/4" DIA x 12" LG.	P.3	
	15	8		3/4" DIA LOCK WASHER	P.14	
	16	4	1824222-B	BEARING ADJUSTABLE STOP		
	17	16		BOLT H.H.H.N. 5/8" DIA x 5" LG.	P.16	
	18	16		5/8" DIA. LOCK WASHER	P.17	
B		1		DISCHARGE END ASSEMBLY		
	21	1	1824222-A	DISCHARGE END SUPPORT		
	22	4	1824222-B	BEARING ADJUSTMENT BRACKET		
	23	2	1670232-A	TRUNNION ROLLER ASSEMBLY		
	24	2	1670232-B	TRUNNION ROLLER GUARD		
	26	16		BOLT H.H.H.N. 5/8" DIA x 5" LG.	P.22	
	27	16		BOLT H.H.H.N. 5/8" DIA x 5½ LG.	P.22	
	28	32		5/8" DIA CUT WASHER	P.26	
	29	16		5/8" DIA. LOCK WASHER	P.27	
	30	8		BOLT H.H.H.N. 3/4" DIA x 12" LG.	P.28	
	31	8		3/4" DIA LOCK WASHER	P.30	
	32	16		1" DIA LOCK WASHER	P.26	
C		1		TANGENTIAL DRIVE ASSEMBLY		
	35	1	1823223-A	DRIVE SUPPORT		
	36	1	1823219-B	DRIVEN SHAFT ASSEMBLY		
	37	1	1823219-C	DRIVE SHAFT ASSEMBLY		
	38	16		BOLT H.H.H.N. 1" DIA x 4½ LG.	P.33 & 37	
	39	28		1" DIA CUT WASHER	P.38	
	40	16		1" DIA LOCK WASHER	P.38	
				5" PITCH 3 STRAND SINGLE TYPE "R"		
	44	1		STRAND OF 4XS-5822 CHAIN x 31'-3 (75 PITCHES)		
	45	1	1823220-B	TANGENTIAL DRIVE GUARD (USE 139WS1 NAME PLATE)		
	46	1	1823220-C	TANGENTIAL DRIVE GUARD (USE 139WS1 NAME PLATE)		
	47	2	1823220-25	TANGENTIAL DRIVE GUARD		
	48	21		BOLT H.H.H.N. 3/4" DIA x 1" LG.	P.35, 36 & 40	
	49	8		BOLT H.H.H.N. 3/4" DIA x 12" LG.	P.35 & 36	
	50	8		3/4" DIA LOCK WASHER	P.37	
	51	1	1824221-C	ANGLE SUPPORT		
	52	1	1824221-B	ANGLE SUPPORT		
	53	2	1824221-28	ANGLE BRACE		
	55	2	1824221-27	ANGLE		
	56	32		BOLT H.H.H.N. 3/4" DIA x 1 3/4" LG.		
	57	5		10 CANS STANOLITH #42 GREASE (STANDARD OIL CO.) SHOP ALL BEARINGS		

DIMENSION TOLERANCES EXCEPT AS SPECIFIED
DECIMAL ± FRACTIONAL ±

TITLE #1003 Roto Louvre Unit Ass'y 05
Support Base 4/Rollers, Tang. Drive
UNION CARBIDE NUCLEAR CO.

REV.	DATE	DESCRIPTION OF REVISION
A		

DRAWN W. BOLGER DATE 2-15-63 | CHECKED W.B. | APPROVED F.K. | FORM
SCALE 1/4 = 1'-0
REFERENCE K7506-10

LINK-BELT COMPANY

K7506RD-14

Clemons & Kers, Inc., Chicago